KINGSTON 300

POWER SELECTABLE LED HIGHBAY

GHB300 AD

IP 65 | NON DIMMABLE | Flex & Plug | IK 10 | W SELECT WATTAGE | 5 YEARS WARRANTY

FEATURES

- Die-cast aluminium body
- Black powder coated finish
- Polycarbonate diffuser
- Intergrated constant current LED driver
- THREE POWER setting with DIP switch on the driver
- LED lifespan: 50000 Hours @ L80/B10, Ta 25°C
- Ta: -30°C to +45°C

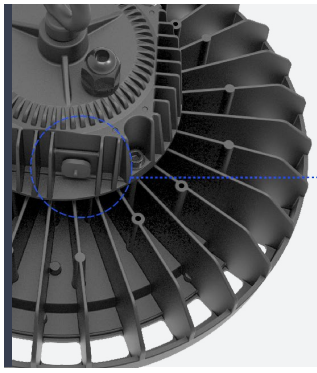

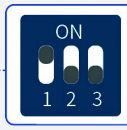

Power	①	②	③
200W	ON	OFF	OFF
150W	OFF	ON	OFF
100W	OFF	OFF	ON

POWER SELECTABLE

DIMENSION

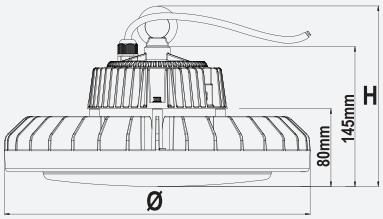

OPTIONS

- BEAM ANGLE: 60°, 90°
- DIMMING:
  -Analogue dimming (1~10V)
- Frosted PC cover
- Microwave motion sensor
- Wall/ceiling bracket

TECHNICAL SPECIFICATIONS

MODEL NO.	INPUT VOLTAGE (V)	POWER (W)	LUMEN (lm)	COLOUR TEMPERATURE (K)	CRI	BEAM ANGLE (°)	DIMENSIONS (Ø×H) (mm)	NET WEIGHT (Kg)	FITTING COLOUR
GHB300/200 DL AD	230	100/150/200	15000/22500/30000	5000	> 75	110	320 x 188	4.3	Black

Specifications above are for reference only and may vary without prior notice

KINGSTON 300 is designed for industrial lighting adopting the newest LED lighting technology, with longer lifespan, lower maintenance cost and higher efficiency. Thanks to several different covers, lenses and reflectors these UFO high bay lights are very well suited for most factories, warehouses, Exhibition halls and showrooms. High grade materials and perfect workmanship provide excellent cooling abilities and a long lifespan. With 150lm/W and up to 30000lumen they provide a very efficient way to replace all sorts of traditional HID lamps.

EXPLODED DRAWING

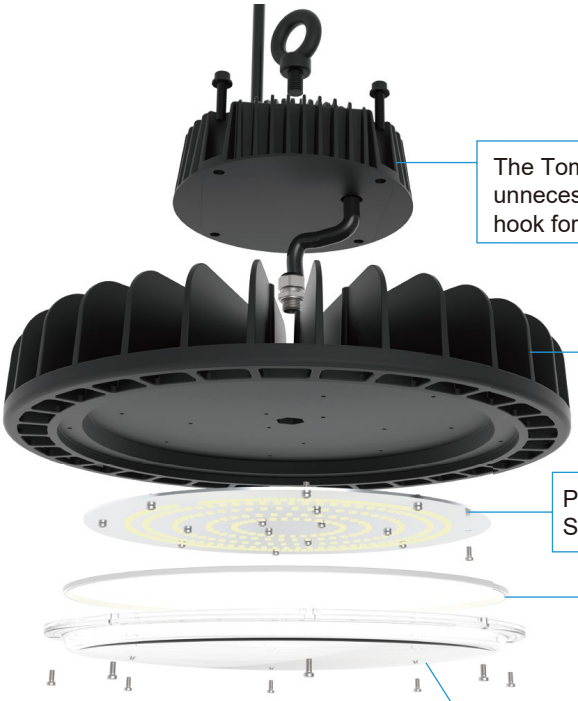

The Tomcarline (or Meanwell) power driver is mounted on spacers to prevent unnecessary heat transfer from the lamp body to the driver. A central mounted hook for suspended installation is included

Massive aluminum die-cast heat sink with notably good heat dissipation abilities

PCB with excellent thermal conductivity housing the SMD2835 LED chips

Industrial rated silicone gasket to protect the LED PCB

Durable and highly transparent PC cover (milky optional)

PHOTOMETRIC DATA

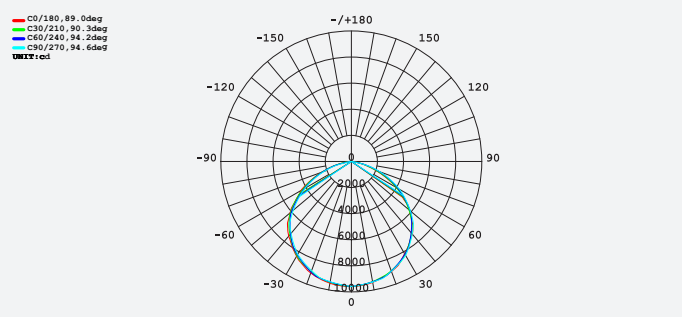

ACCESSORIES

This mounting hook is included in the pricing for the round driver. It can be screwed on the top of the driver casing allowing for a quick and easy suspended installation.

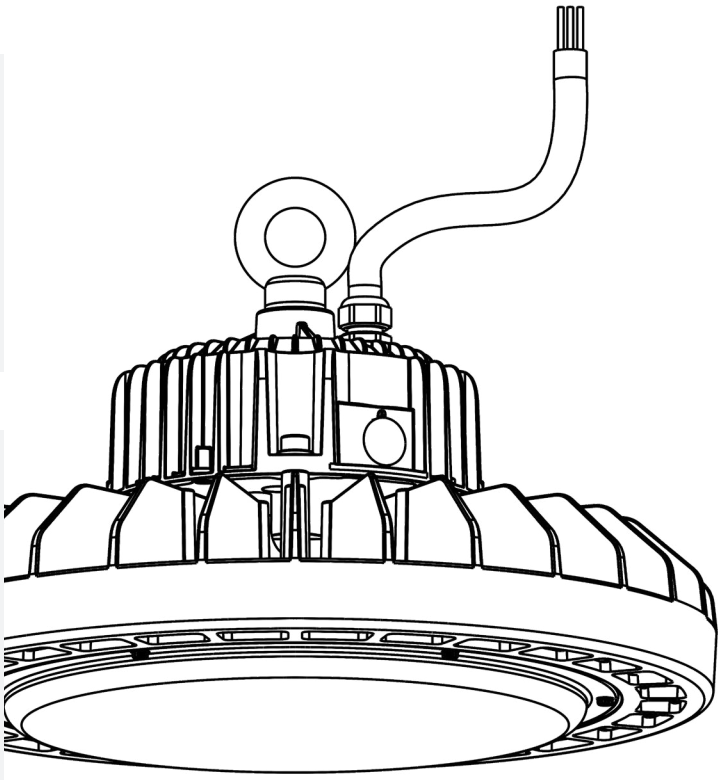

Specifications above are for reference only and may vary without prior notice