G-Light®

Lighting Council NEW ZEALAND™ MEMBER

# INSTALLATION GUIDE

V 1.0 04/2020

*Read this user guide carefully before installation, and keep for future reference.*

**IMPORTANT:** IN THE INTEREST OF PRODUCT PERFORMANCE AND SAFETY PLEASE READ THESE INSTALLATION AND WARRANTY INSTRUCTIONS BEFORE INSTALLING THE PRODUCT.

DIY MUST BE INSTALLED BY A LICENSED ELECTRICIAN

**G-Light** products are designed in accordance with all mandatory International, Australian and New Zealand Standards, which require installation by a qualified installer and regular cleaning and maintenance of the equipment. Products are sold in accordance with the following instructions and **NSG** standard terms and conditions of sale.

*LED bulkhead **DAYTONA** series electrical and installation specification effective 04/2020.*

# DAYTONA

## MODEL: GDY285 TC

**DIMENSIONS**

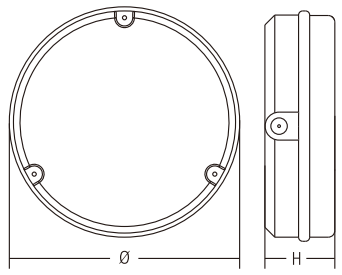


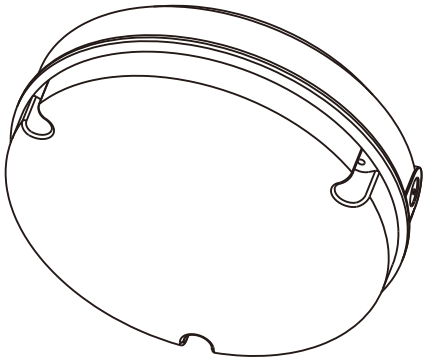

| MODEL NO. | INPUT VOLTAGE (V) | POWER (W) | LUMEN (lm) | COLOUR TEMPERATURE (K) | CRI | BEAM ANGLE (°) | DIMENSIONS (Ø×H) (mm) | FITTING COLOUR | CARTON QUANTITY |
|---|---|---|---|---|---|---|---|---|---|
| GDY285 TC | 230 | 18 | 1400 | 3000/4000/6000 | 80 | 120 | 285x86 | White | 10 |
| GDY285 TC EM | 230 | 18(2.3)* | 1400(340)* | 3000/4000/6000 | 80 | 120 | 285x86 | White | 10 |

*When running on EM backup Wattage is 2.3W & Lumen 340lm

| | | | |
|---|---|---|---|
| **Electrical class** | Class II | **Line current** | 0.09A |
| **Power factor** | >0.90 | **Earth Leakage current** | 0.5mA |
| **Operating ambient min/max (°C)** | -20~+50 | **Storage ambient limit (°C)** | -20~+50 |
| **Operating humidity** | 40%-70% | **Storage humidity** | 40%-70% |
| **Calculated TM-21,85 °C, L70 (hrs)** | >50,000 | **Reported TM-21, 85 °C,L70 (hrs)** | >36,000 |
| **Aiming restrictions (if any)** | NA | **Product application** | Indoor & Outdoor |
| **IK rating (if relevant)** | Ik10 | **Product installation orientation** | Ceiling / wall surface mount |
| **CCT (k) switch control** | Yes | **Dimmable** | No |
| **Insulation cover rating (if any)** | NA | **Attachmment type** | NA |
| **IP rating** | IP65 | **User replaceable LED** | No |
| **Replaceable LED** | Yes | | |
| IP rating for interior products: The designated IP rating is "from below the ceiling" unless otherwise specified. | | | |
| IP rating ALL products: Termination of the product must be made in accordance with the IP rating. | | | |
| Earth Leakage current: Is calculated in accordance with AS/NZ 60598.1.2013 table 10.3. | | | |

**1. CCT selection (where supplied) – IMPORTANT,** where CCT colour temperature selection switching is provided, it is important to switch OFF the power before the CCT selection is made, otherwise equipment damage may occur.

**2. Recycling** – **NSG** encourages recycling, please consider the environment when disposing off packaging and components.

**3. Switching or test intervals** – For optimum product performance, good design practice does not encourage 24/7 operation of lighting products without the provision of a routine switching or regulatory test cycle. As a guide for continual operation installations, a twelve (12) hour duration for Industrial and Commercial applications and six(6) hour duration for Residential applications should be considered.

**4. Product maintenance** – In line with the relevant design standards and to protect your investment, it is important to have in place a routine cleaning program that reflects the installation environment and maintains the product in a clean and functional condition.

***IMPORTANT** - The supply must be isolated before any product maintenance or cleaning is conducted. In addition, damage to ANY cable or cord supplied with the product must be addressed as follows; For attachment type X having a specially prepared cable, if the external flexible cable is damaged, it must be replaced by an equivalent cable exclusively available from the manufacturer or authorised installer. For attachment type Y, if the external flexible cable is damaged, it must be exclusively replaced by an equivalent cable by the manufacturer or authorised installer. For attachment type Z, if the external flexible cable is damaged, the cable cannot be replaced and the luminaire must be destroyed.*

**5. Adverse, corrosive and coastal installation applications** – Unless the product is specifically designated for such applications in these installation instructions, which is supported by a professional maintenance program; installation of equipment in such environments is not recommended.

**6. Dimming products** – Dimming circuits and product compatibility must be validated by the installer before installation; **NSG** cannot be responsible for third party changes in dimmer compatibility.

**7. Suspended products** – For installation safety, any suspended products must NOT be installed in high air movement spaces or locations subject to impact.


Copyright @ NSG JUNE 2018

# INSTALLATION GUIDE

**8. Light source replacements –** (non-replaceable light sources) - The light source of the product is deemed not replaceable, when the product reaches its end of life, the complete product must be replaced by a qualified installer. (Non-user replaceable light sources) - The light source of the product must only be replaced by the manufacturer or qualified installer. Caution, risk of electric shock.

**9. Interior downlights and sensors with remote drivers** – The mounting facilities provided for the transformer/driver (if any), need only be utilized if in the application of the product is required by AS/NZS3000. Drivers are not designed for installation environments that restrict conventional airflow.

**10. Floodlight products–** Unless nominated aiming restrictions or installation parameters apply, products are designed for installation environments between ground and 15 metres in height, subject to the desired optical performance being achieved.

**11. Emergency commissioning and operation:**

(1) Battery switch: For safety and product performance the product is transported with the battery switched OFF. Prior to commissioning the battery switch MUST BE switched ON for correct functionality. (2) Switch on mains supply. The charge monitor LED will illuminate. (3) Allow the unit to operate for 30 minutes and then depress the test switch to check emergency operation. (4) Release the test switch and allow the unit to operate for 16 hours to fully charge the battery after which time the unit is ready for duty. (5) Self-contained emergency luminaires shall be subjected to a battery discharge test for the required duration at regular intervals in accordance with AS/NZS 2293 applica - ble to emergency lighting. Batteries should be replaced with the same brand/type when the rated duration is no longer achieved. (6) In the interest of safety, the 6 monthly test should be undertaken during daylight hours to allow for the possibility of failures of the standard lighting supply whilst the battery is discharged.

**12. Specific installation procedures – Installation Orientation**

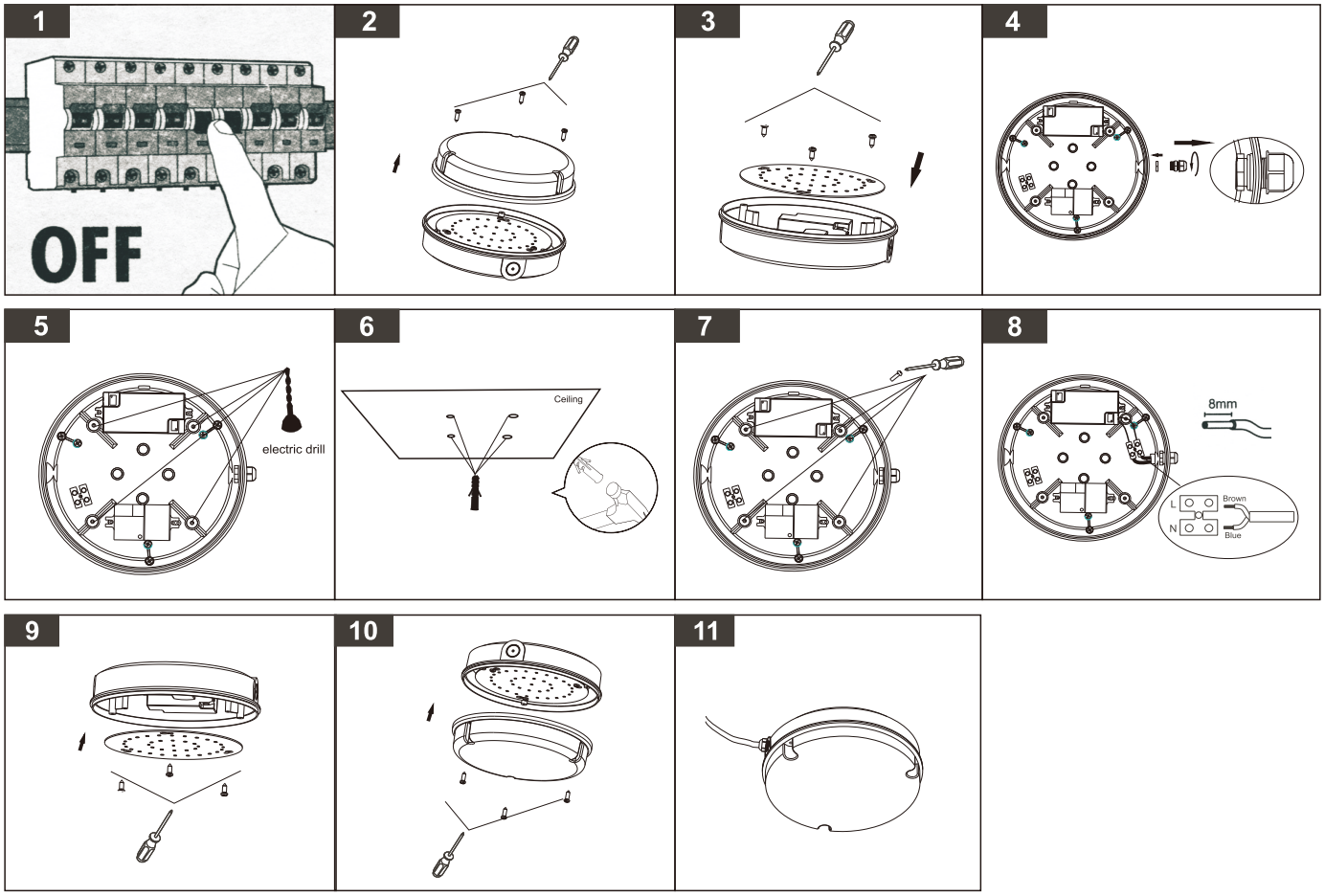


**13. Warranty –** In accordance with **NSG**'s standard terms and conditions of sale, **NSG** warrant this product to be free from defects in materials and or workmanship for a period as stated below for goods not subject to incorrect installation, maintenance, operation, mishandling, environmental, unauthorised modifications or electrical operating conditions outside the nominated product specification as detailed in these installation instructions. The benefits to you given by this warranty are in addition to other rights and remedies you have under law. Our goods come with guarantees that cannot be excluded under the New Zealand Consumer Guarantees Act. You are entitled to a replacement or refund for a major failure and compensation for any other reasonably foreseeable loss or damage. You are also entitled to have the goods repaired or replaced if the goods fail to be of acceptable quality and the failure does not amount to a major failure.

***Warranty term – Sixty (60) months from date of purchase.***

## How to make a claim?

**Step # 1** – Within 30 days of the fault discovery, please contact the original place of the G-Light product purchase during standard (local) business hours, with the following information: (a) proof of purchase (b) description and quantity of the claimed fault (c) address of installation. (d) operating hours of the product.
**Step # 2** – It is then the responsibility of the original place of product purchase to report the matter to **NSG** aftersales;
**Step # 3** – Upon review of your claim and if the product is required to be returned to **NSG** for technical evaluation, then at the owners expense the product must be returned to **NSG** as per the above nominated locations.
**Step # 4** – Pending the evaluation, the claim will be validated resulting in the product being repaired or replaced with the same or best equivalent product at the discretion of **NSG**, or rejected if the product fault was found to be caused by conditions beyond the responsibility of **NSG** warranty obligations. Consideration of installation, product removal, return freight and or testing fees are not the responsibility of **NSG**.

# INSTALLATION GUIDE

## EMERGENCY

### PRODUCT FEATURES

- Intelligent automatic recharging function
- Automatic output current adjustment
- Constant current mode
- Wide range LED voltage 6-60V
- 3 hour emergency operation
- Over discharge protection
- Test button for checking the device function
- Fitted with LiFePO4 battery
- Suitable for LED luminaire with detached driver

### IMPORTANT NOTES

- This product must only be installed by a licensed electrican
- Please ensure to disconnect with power supply when installing
- Please connect wires according to the wiring diagram
- Please keep battery as far as possible from lamps/heat source when installing
- It is recommended to disconnect the battery before storage or delivery
- Battery should be charged once in three mouths in order to keeping it in initial performance

### TECHNICAL DATA

| | |
|---|---|
| Rated supply voltage | 220-240V~ |
| Frequency | 50/60Hz |
| Input power | 3.5W |
| Recharge hours | 16h |
| EM LED power LED | 2.3W |
| Battery type | LiFePO4 3.2V 3.3Ah |
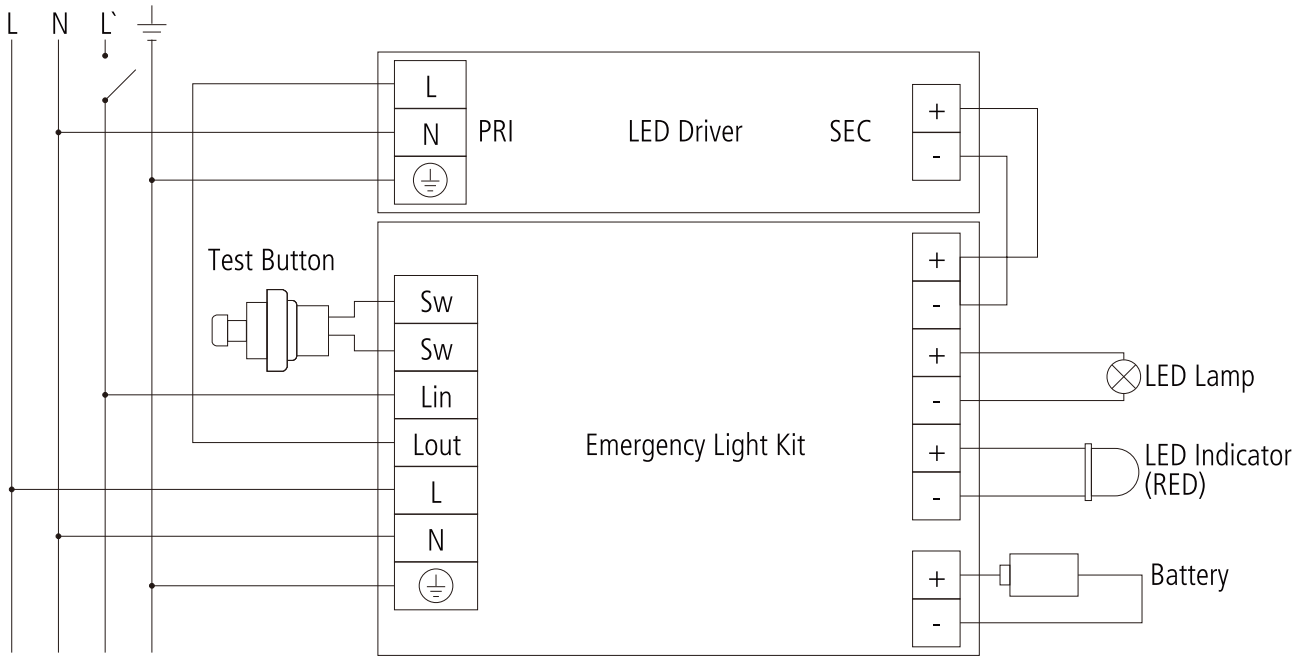
### WIRING FOR LED DRIVER